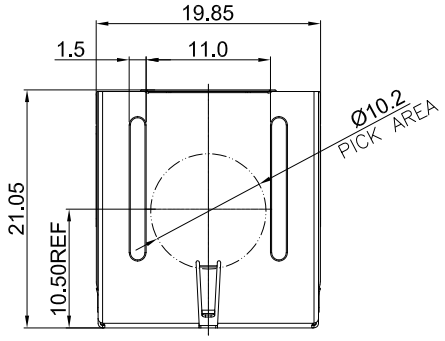

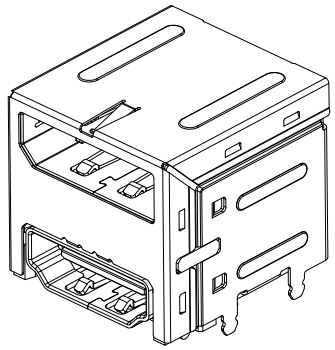

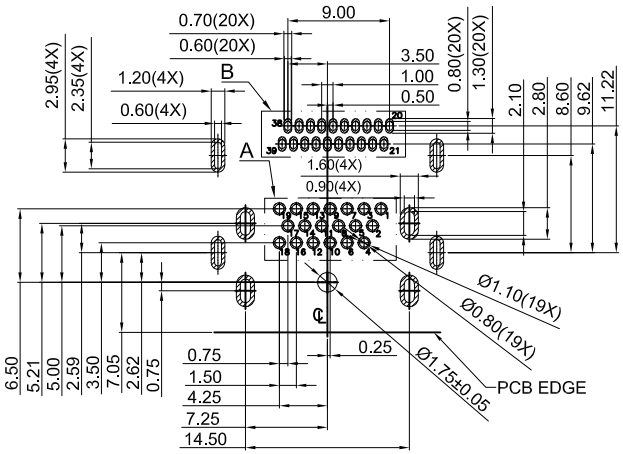

RECOMMENDED DP& HDMI PCB LAYOUT(COMPONENT SIDE)

(TOP VIEW) DEFAULT TOL±0.05

1.MATERIAL SPECIFICATION:
1-1.DISPLAYPORT MATERIAL SPECIFICATION.
1-1-1.HOUSING: LCP(UL 94V-0) BLACK.
1-1-2.COVER:LCP(UL 94V-0) BLACK.
1-1-3.CONTACTS: BRASS,T=0.20mm.
1-1-4.FRONG SHELL: STAINLESS STEEL,T=0.2mm.
1-1-5.BACK SHELL: STAINLESS STEEL,T=0.25mm.
1-1-6.INTERIOR SHELL:STAINLESS STEEL,T=0.40mm.
1-2.HDMI MATERIAL SPECIFICATION.
1-2-1.HOUSING: LCP(UL 94V-0) BLACK.
1-2-2.COVER:LCP(UL 94V-0) BLACK.
1-2-3.CONTACTS: BRASS,T=0.20mm.
1-2-4.SHELL:BRASS,T=0.50mm.
2.PLATING SPECIFICATION:
2-1.DISPLAYPORT PLATING.
2-1-1.CONTACTS:
NI 50u"MIN.UNDERPLATED VOERALL.
GOLD FLASH ON THE FUNCTIONAL AREA OF CONTACT.
50u"MIN MATTE TIN PLATED ON SOLDER AREA.
2-1-2.BACK SHELL:
NI 50u"MIN UNDERPLATED VOERALL.
2-2.HDMI PLATEING.
2-2-1 CONTACT:
NI 50u"MIN.UNDERPLATED VOERALL.
Au PLATED ON THE FUNCTIONAL AREA OF CONTACT.
50u"MIN MATTE TIN PLATED ON SOLDER AREA.
2-2-2 SHELL: NI 50u"MIN UNDERPLATED OVERALL.
3. ELECTRICAL CHARACTERISTICS
3-1. CURRENT RATING: 0.5 AMP
3-2. VOLTAGE RATING: 40 V
3-3. CONTACT RESISTANCE: 30MILLIOHMS MAX
3-4. INSULATION RESISTTANCE:100M MIN.@500V DC
3-5. DIELECTRIC WITHSTANDING VOLTAGE: 500V AC FOR 1 MINUTE
4. MECHANICAL CHARACTERISTICS:
4-1. INSERTION FORCE : 4.5KGF MAX.
4-2. WITHDRAWING FORCE : 1KGF ~ 4KGF.
5. LIFE TEST: 10000 CYCLES
6. OPERATING TEMPERATURE: -25˚C TO +85˚C
※SIGN "Ⓧ" IS IMPORTANCE DIMENSION

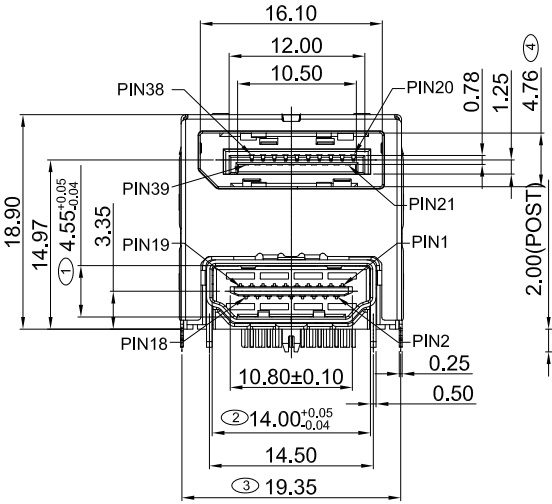

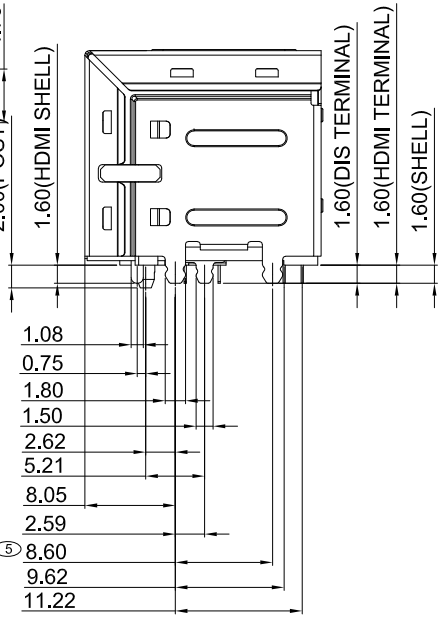

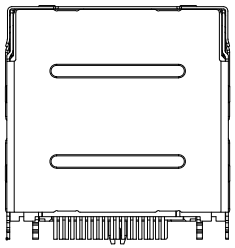

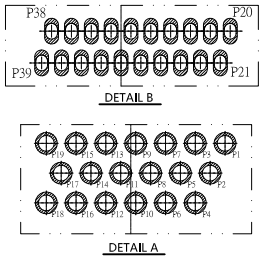

HDMI PIN ASSIGNMENT		Displayport Pin Assignment	
PIN	SIGNAL TYPE	PIN	SIGNAL TYPE
1	TMDS Data2+	20	In/Out
2	TMDS Data2 Shield	21	GND
3	TMDS Data2−	22	In/Out
4	TMDS Data1+	23	In/Out
5	TMDS Data1 Shield	24	GND
6	TMDS Data1−	25	In/Out
7	TMDS Data0+	26	In/Out
8	TMDS Data0 Shield	27	GND
9	TMDS Data0−	28	In/Out
10	TMDS Clock+	29	In/Out
11	TMDS Clock Shield	30	GND
12	TMDS Clock−	31	In/Out
13	CEC	32	Config
14	Utility	33	Config
15	SCL	34	I/O
16	SDA	35	GND
17	DDC/CEC Ground	36	I/O
18	+5V Power	37	Out/In
19	Hot Plug Detect	38	Rtn
Shell	Shield	39	Power Out/PWR Out

PART NUMBER INFORMATION

K99DH-1 1 1 1 07-6 0 01

DP+HDMI类

① HDMI外壳材质：
1. 黄铜

② HDMI外壳电镀：
1. 镍镍

③ 端子电镀：
07. 半金雾锡G/F

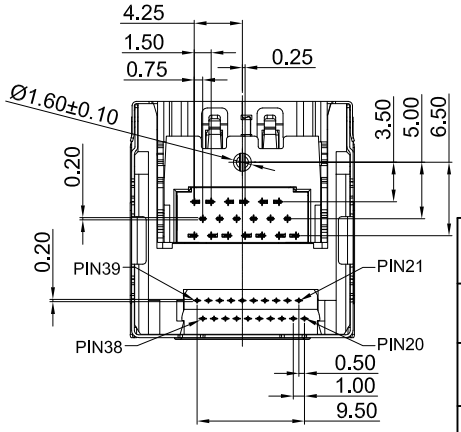

KEm 奇速科技有限公司
Qi -Speed Technology CO., LTD.

產品名稱:
PRODUCT NAME
DP+HDMI连接器母座 端子G/F

版本	修改事項	修改日期

單位：mm
比例：
公差： .X ±0.38
.XX ±0.25
.XXX ±0.13
日期： 2022/9/5

繪圖 DRAWING	設計 DESIGNED	審核 CHECKED BY	核准 APPROVAL BY
JOHNY	JOHNY	LUKE	JAMES

料號:K99DH-111107-6001
PART NUMBER

圖號:K99DH-111107-6001-1
DRAWING NO

版本: REV. 0